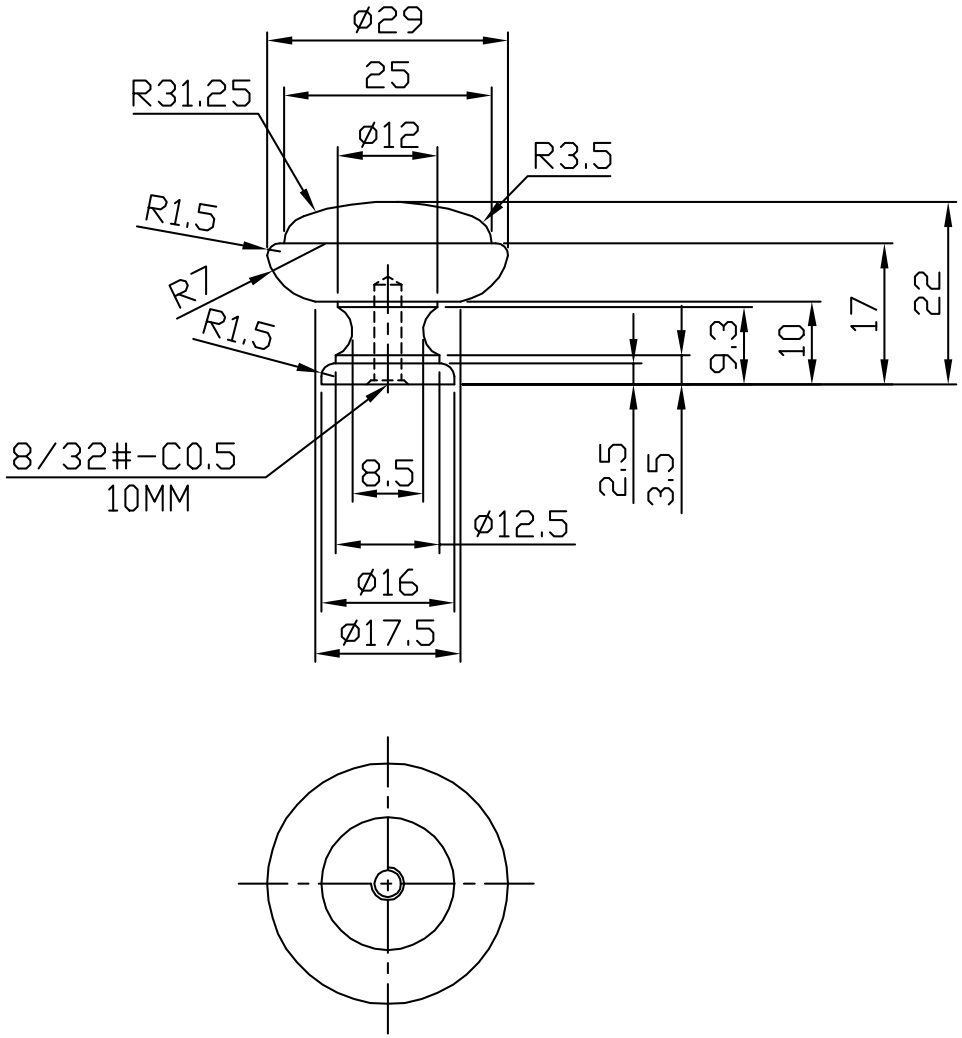

PART NO.	MATERIAL	DATE
9723-1BBN-P	**ZINC**	**9-2022**
COLLECTION **EURO MODERNO**	DESCRIPTION **EURO MODERNO BRUSHED BLACK NICKEL KNOB**	PROPRIETARY AND CONFIDENTIAL **THE INFORMATION CONTAINED IN THIS DRAWING IS THE SOLE PROPERTY OF BERENSON CORP. ANY REPRODUCTION IN PART OR AS A WHOLE WITHOUT THE WRITTEN PERMISSION OF BERENSON CORP IS PROHIBITED.**
UNIT OF MEASURE **MILLIMETERS**		

Berenson™

2495 Main Street, Suite 111 | Buffalo, NY
Phone: 800.333.0578 | Fax: 716.833.2402
Email: Info@BerensonHardware.com