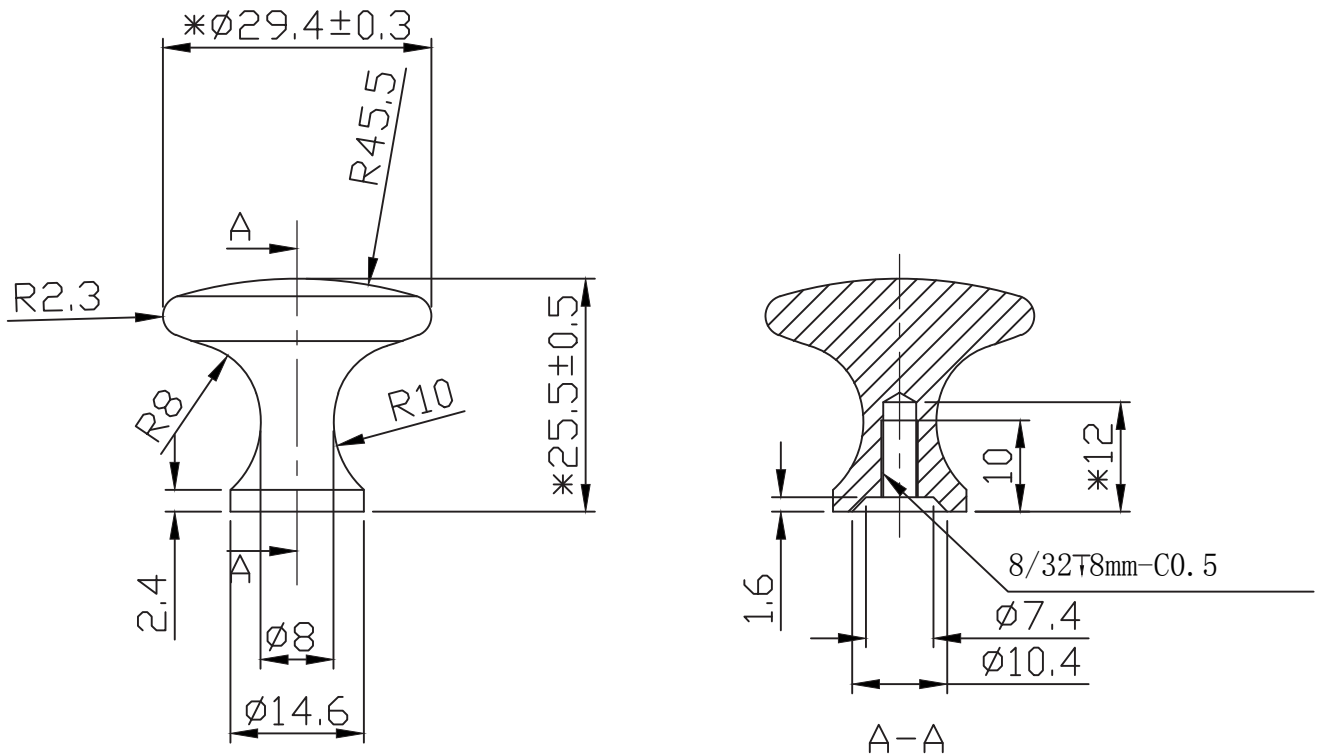

PART NO.	MATERIAL	DATE	
9429-1BPN-P	**ZINC**	**01-23-2020**	Advantage +Plus by Berenson
COLLECTION **CONTEMPORARY ADVANTAGE FIVE**	DESCRIPTION **CONTEMPORARY ADVANTAGE FIVE BRUSHED NICKEL NARROW ROUND KNOB**	PROPRIETARY AND CONFIDENTIAL **THE INFORMATION CONTAINED IN THIS DRAWING IS THE SOLE PROPERTY OF BERENSON CORP. ANY REPRODUCTION IN PART OR AS A WHOLE WITHOUT THE WRITTEN PERMISSION OF BERENSON CORP IS PROHIBITED.**	2495 Main Street, Suite 111 | Buffalo, NY Phone: 800.333.0578 | Fax: 716.833.2402 Email: Info@BerensonHardware.com
UNIT OF MEASURE **MILLIMETERS**			