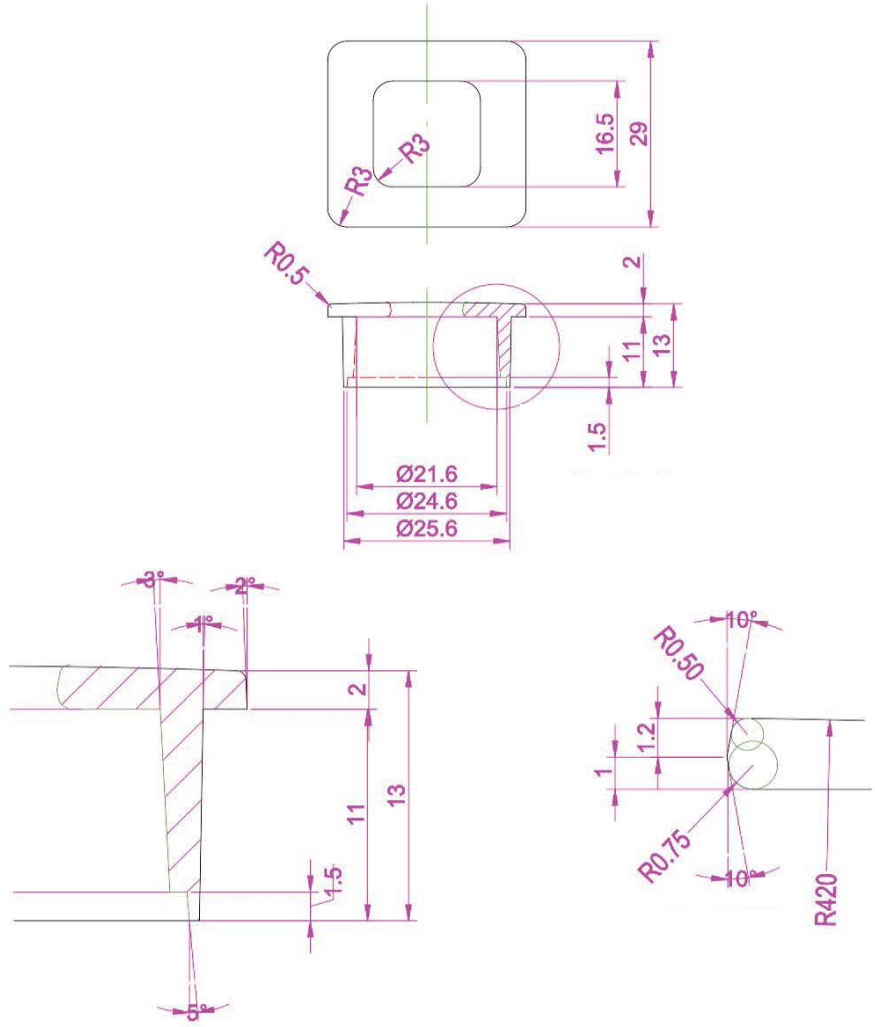

PART NO.	MATERIAL	DATE	
9333-1BPN-C	**ZINC**	**7-2022**	R. Christensen by Berenson
COLLECTION **STYLUS**	DESCRIPTION **STYLUS BRUSHED NICKEL EXTRA SMALL RECESS PULL**	PROPRIETARY AND CONFIDENTIAL **THE INFORMATION CONTAINED IN THIS DRAWING IS THE SOLE PROPERTY OF BERENSON CORP. ANY REPRODUCTION IN PART OR AS A WHOLE WITHOUT THE WRITTEN PERMISSION OF BERENSON CORP IS PROHIBITED.**	2495 Main Street, Suite 111 | Buffalo, NY Phone: 800.333.0578 | Fax: 716.833.2402 Email: Info@BerensonHardware.com
UNIT OF MEASURE **MILLIMETERS**			