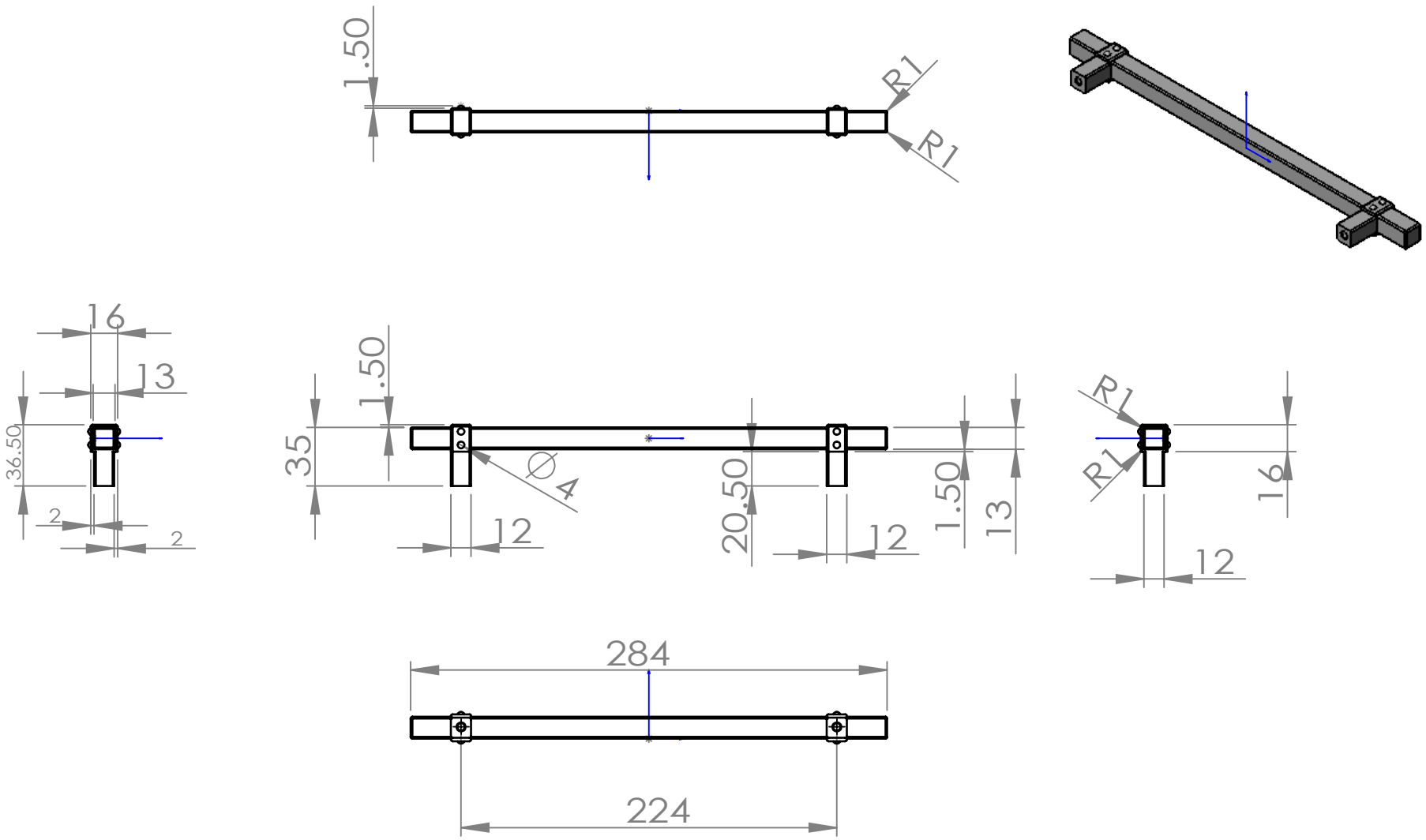

PART NO.	MATERIAL	DATE
5130-4SLT55-P	**ALUMINUM**	**1-2023**
COLLECTION **RIVET REBEL**	DESCRIPTION **RIVET REBEL 224MM CC SLATE BAR AND MATTE BLACK POSTS PULL**	PROPRIETARY AND CONFIDENTIAL **THE INFORMATION CONTAINED IN THIS DRAWING IS THE SOLE PROPERTY OF BERENSON CORP. ANY REPRODUCTION IN PART OR AS A WHOLE WITHOUT THE WRITTEN PERMISSION OF BERENSON CORP IS PROHIBITED.**
UNIT OF MEASURE **MILLIMETERS**		

Berenson™

2495 Main Street, Suite 111 | Buffalo, NY
Phone: 800.333.0578 | Fax: 716.833.2402
Email: Info@BerensonHardware.com